产品安装示意图
Product Installation Diagram

通风柜废液收集系统漏斗安装位置需严格按照规定的开孔尺寸进行开孔，以免安装时无法将导管插入。双通道声光报警器采用内嵌式结构，需根据报警器位置安装图进行开孔，建议安装在操作台下方方便用户实际使用。

The installation position of funnel in the waste liquid collection system of the fume hood should be strictly in accordance with the prescribed size of the opening in case the catheter cannot be inserted during installation.Double-channel acoustooptic alarm adopts embedded structure, which should be installed according to the location of the alarm. It is suggested that be installed under the operating table for user's convenience.

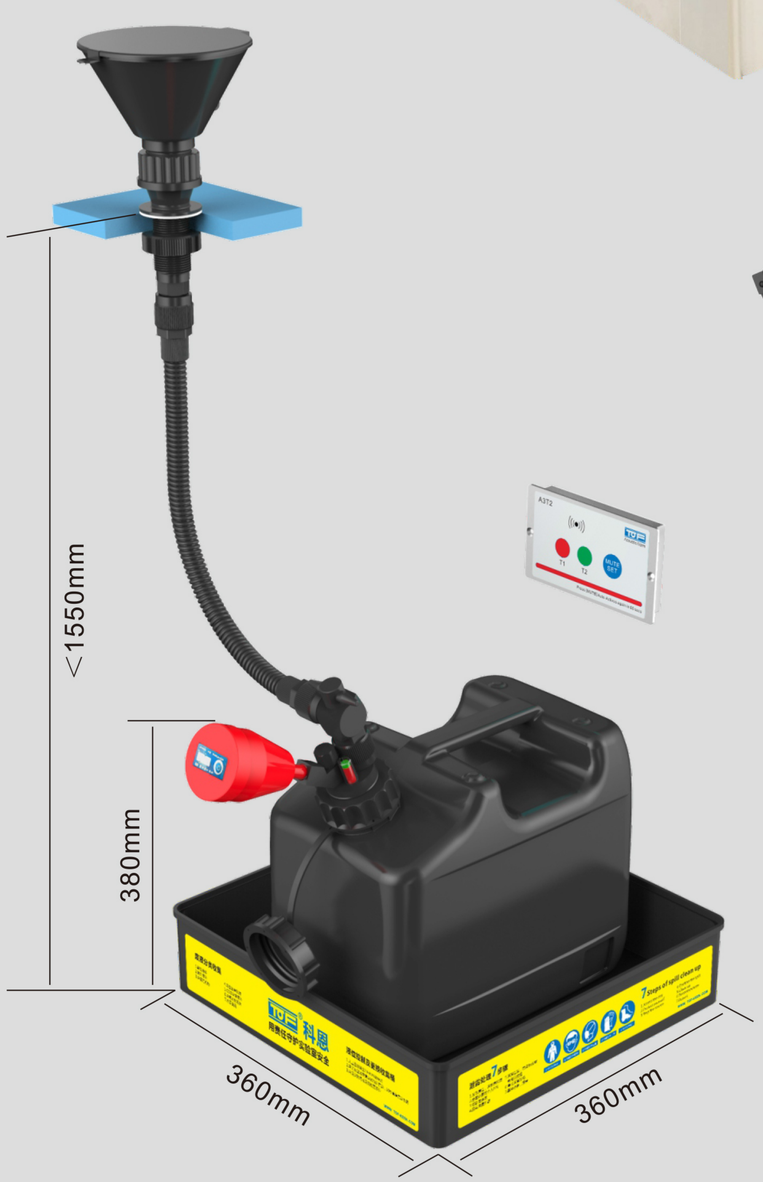

漏斗位置安装图
Funnel Position Installation Drawing

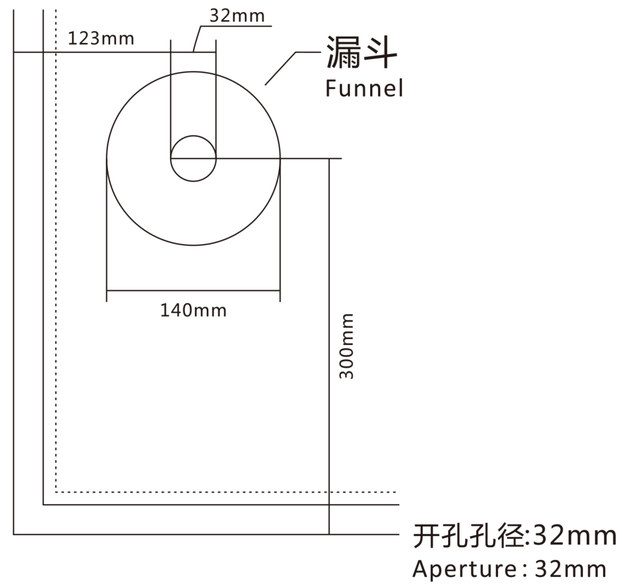
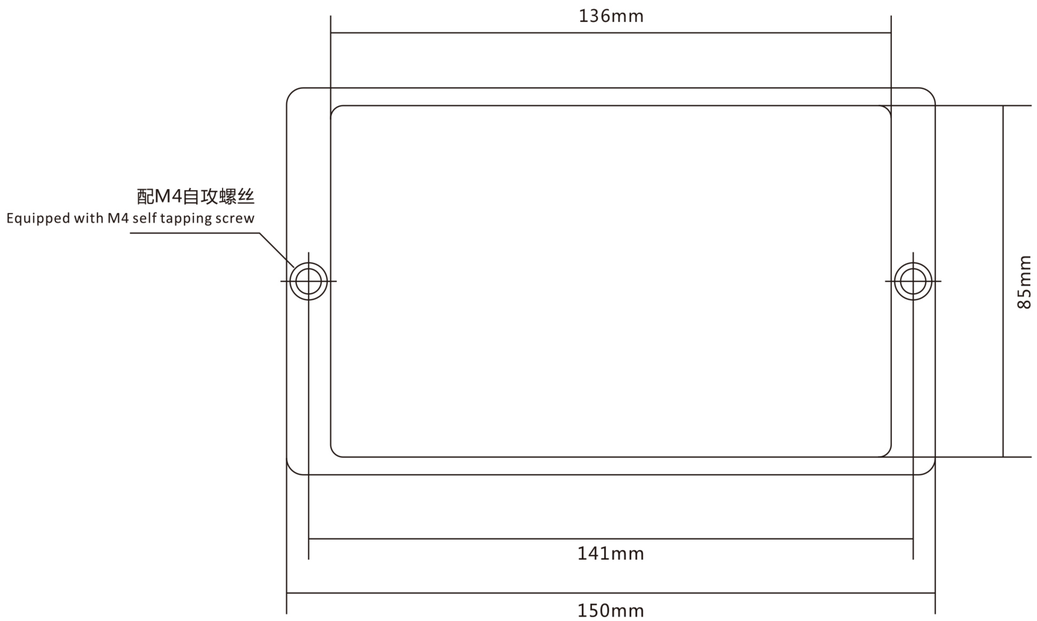
报警器位置安装图
Installation diagram of alarm position